DAIKIN

VRV WI-FI KIT FOR 1 WAY CASSETTE INSTALLATION MANUAL

BRP64AD26

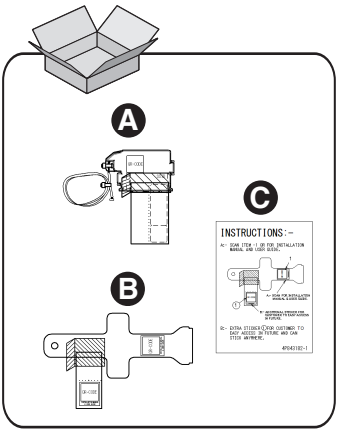

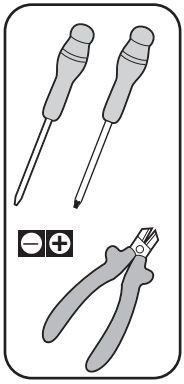

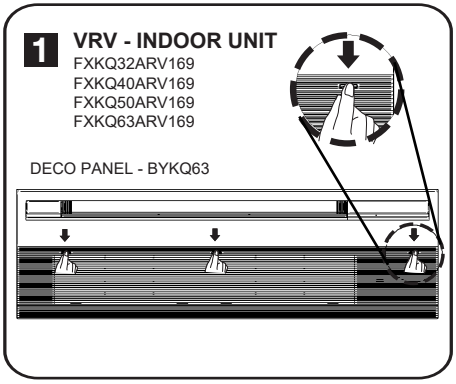

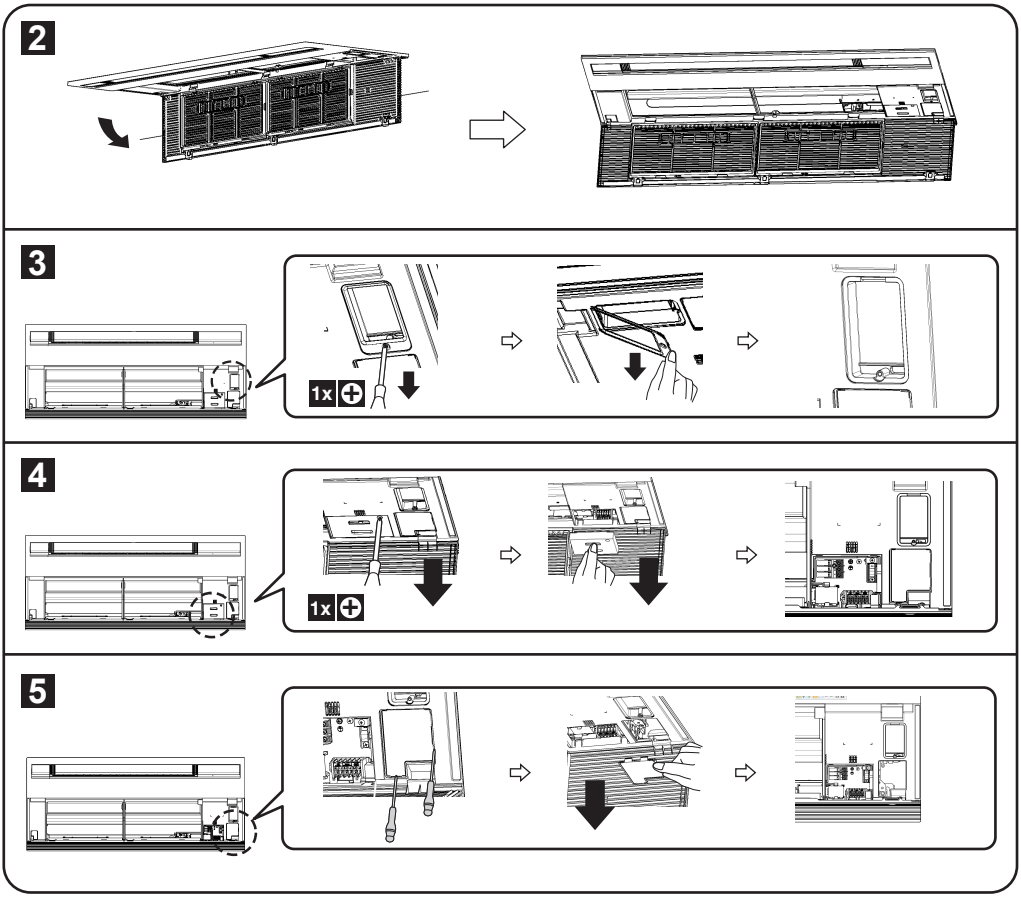

6

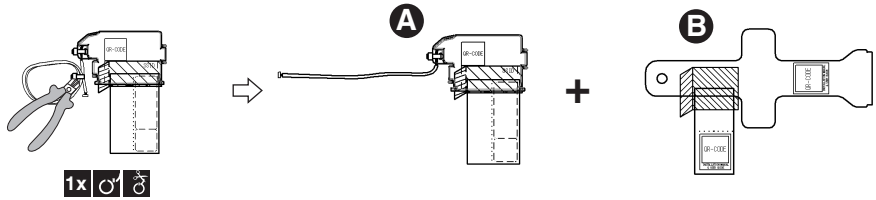

7

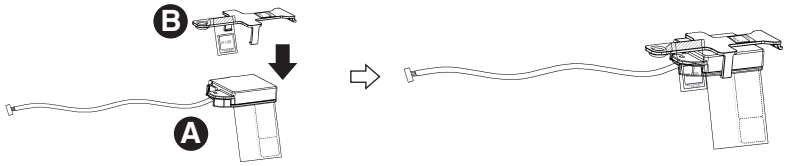

8

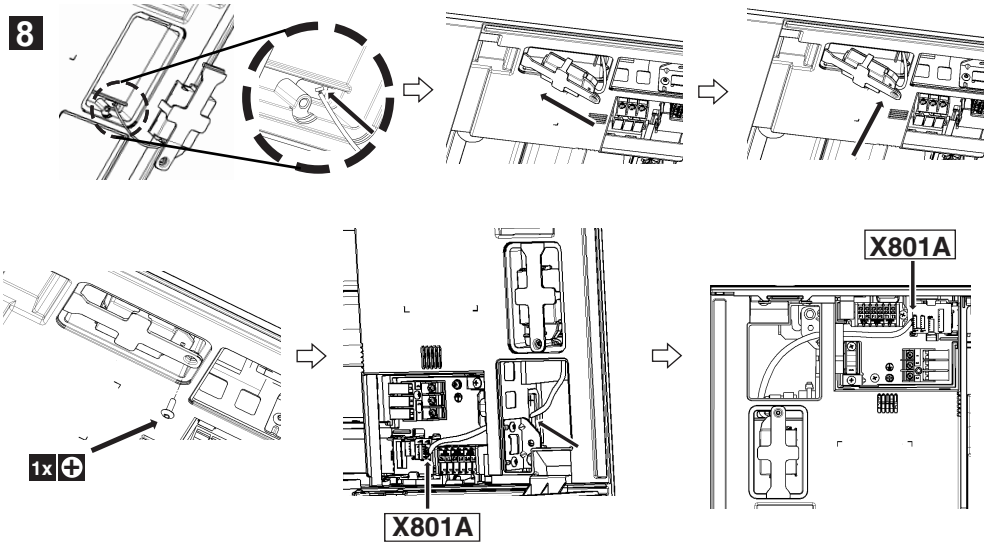

9

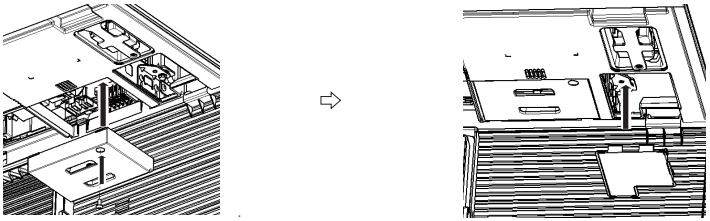
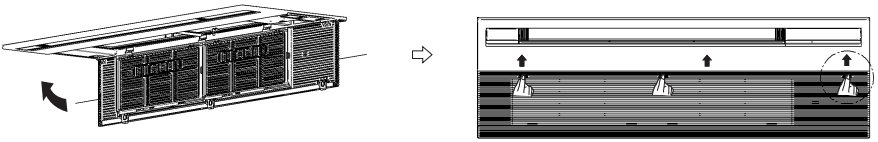
10